----------FOOTNOTES----------

Install Times Legend

A = 2.0 Hours
B = 2.5 Hours
C = 3.0 Hours
D = 3.5 Hours
E = 4.0 Hours
F = 4.5 Hours
G= 5.0 Hours

Baseplate Type Legend

XL = Removable arms (pull pin to remove)
EZ = Removable arms (twist to remove)
EZ2 = Removable arms (twist to remove)
EZ4 = Removable arms (twist to remove)
EZ5 = Removable arms (twist to remove)
MX = Removable arms (pull pin to remove, no crossbar needed)*
MS = Non Removable arms (no crossbar needed)*

Other Codes Legend

N = New Bracket
C = Change in bracket
SO = Special Order
MT = Allow 3-4 weeks manufacturing time

1. Trimming of spoiler, air dam, grille or plastic fascia may be required on some models of this vehicle.
2. This is a crossbar-style baseplate. To use with a direct-connect style tow bar like the Nighthawk, you will also need to order a Quick Disconnect Crossbar, pn 910021-00.
3. Trimming of the shock absorption pad, active air shutter or louver housing, lower air dam, air deflector, reinforcement, cowling and/or rock guard is required.
4. 84-89 ACURA INTEGRAS utilize 2 different baseplates. The distinction is usually between 2dr and 4dr; however, very rarely, the frames have been interchanged, requiring the opposite baseplate design. To verify which baseplate is necessary, look at the bolts that hold the E-A unit (Energy Absorption Unit) to the frame tower on the driver's side. If the E-A unit is bolted on with 3 bolts @ 1, 7 and 9 o'clock positions, then the 1510-3 designed for the 2dr is necessary. If it is bolted on with two bolts @ the 3 o'clock and 9 o'clock positions, then the 1510-1 designed for the 4dr is to be used. If it is bolted with 2 bolts, one @ 1 o'clock and one @ 7 o'clock, neither baseplate will work.
5. 84-90 CARAVANS AND VOYAGERS utilized two different bumpers. The "metal bumper" has a steel or aluminum bumper that is visible. It may have plastic trim or plastic end caps, but a good portion of the metal bumper is visible. The "plastic bumper" has a plastic skin or fascia that completely covers the steel bumper core. No metal is visible.
6. 85-88 SPRINTS utilized two types of sway bar mounting baseplates. If the brackets are perpendicular to the sway bar, then the 110-1 is needed. If the baseplates are at an angle to the sway bar, then the 109-1 is necessary.
7. MOST RENEGADES AND WRANGLERS utilize a steel bumper that is shaped like a "U". The steel bumper has a flat top and face, which the 1409-3 or 1409-1 baseplates bolt to; however, some versions incorporate bumpers without a flat face and top which prevent the use of these baseplates. **'98 Jeep Wrangler** uses 1417-1, if the front bumper has bumperettes.
9. Due to the different front-end trim packages used on these Ford and Mercury cars, it may be necessary to take a measurement in order to obtain the proper baseplate kit. The measurement is taken from the front bottom face of the frame, where it ends just behind the bumper (below the radiator). If the measurement is:

9½" or less – use the 421-1 baseplate
11½" or less – use 417-2 baseplate
13½" or less – use the 415-1 baseplate
If there is no painted plastic under the bumper — use the 417-3 baseplate

11. Measure outside to outside, across the front of the subframe horns and under the isolation damper. 47½" = 158-1 for Buick or 158-2 for Cadillac and Oldsmobile 49½" = 158-4
12. Two different tie down placements can be found on the 84-85 Honda Accords and 88-90 Acura Legends. A measurement must be taken from the center of the first bolt going up into the subframe directly behind the tie down plate to the center of the eye on the tie down plate. If the measurement is approx. 3½", use the 1503-1 baseplate. If this measurement is approx. 4¾", use the 1505-1 baseplate.
13. If the vehicle has tack-welded tie down plates, the plates will have to be removed before mounting the baseplate. This will add to the installation time.
14. Add 1.5 hours if vehicle has tow hooks. Hooks and brackets must be removed in order for baseplates to fit.
15. 118-1 96 SUZUKI SIDEKICK – Check crossover tube. If ends are open, use the 118-1. If the ends are blocked, use the 118-8.
16. 118-3 96 SUZUKI SIDEKICK – Check crossover tube. If ends are open, use the 118-3. If the ends are blocked, use the 118-15.
18. To determine which baseplate you may need, locate four bolts on the bottom of the subframe just behind the lower radiator support. Are all of these bolts in a straight line from passenger side to driver's side? If so, use kit 104-1 or 148-1, depending upon application. Some vehicles will have the passenger side outside subframe mounting bolt staggered forward ½". This will require baseplate kit 104-3 or 148-3, depending upon the application. This vehicle utilized several different subframes. It is possible that neither baseplate will fit. If so, measure how far the lower radiator support extends below the subframe. Now, measure from the center of either one of the inside subframe bolts straight out to the middle of the underside of the bumper. Secondly, measure from the same subframe bolt straight out to the front edge of the bumper. Please have this information available when you call to place your order.
20. Inspect tie down plates on the front of the frame. If attached with 3 bolts, use the 503-1. If welded, use the 503-2. Also, measure from the center of the lower front bolt to the lip of the air dam. If 4½" (approx.) use 503-1. If 6 ½" (approx.) use the 503-3.
24. Baseplate will not fit if the vehicle has an aftermarket air conditioner.
25. ON THE 91-96 JEEP CHEROKEES, the plastic under the bumper must be trimmed and a small bumper strap needs to be cut.
26. 1418-3 may be substituted for the 1402-1; however, footnote 25 then applies. All 1418-1 and 1418-3 made before 9/18/97 WILL NOT FIT Cherokees with tow hooks.
28. Use the 445-16 instead of the 445-15 if your Windstar has the rear passenger air conditioning system.
29. THE 97 AND NEWER CHRYSLER CIRRUS, DODGE STRATUS AND 98 PLYMOUTH BREEZE utilize two different motor subframe mounts. One subframe has a substantial 1½" x 2" rectangular bent tube going underneath the engine near the motor mounts. Stratus and Breeze with this subframe require kit # #247-3. Stratus and Breeze with no cross member under the engine (near the motor mount) require 247-8.
30. Some vehicles will require Quick-Disconnect brackets for the additional space needed for TRACKER tow bar to fit properly.
31. Trimming of horizontal rib in lower grille is necessary on '98 and newer Plymouth Voyagers.
32. Check the bottom front frame rails adjacent to the tie down plates for factory holes or frame nuts. If present, use 317-2 baseplate kit. If NO holes are present, use a 329-1 baseplate kit.
33. No REMCO available for automatics.
34. Jeeps with factory fog lights will have to move fog lights 1" out from the stock position to clear mounting hardware.

35. Customers should check and make sure that front tie down loops are present before ordering kit.

36. Although the same basic frame was used on all Chevy & GMC pickups & SUVs from 1987-2000, slight frame variations require different brackets to accommodate all of these vehicles. Carefully read the following to determine the correct bracket:
FOR 87-98 CHEVY & GMC TRUCKS & SUV'S: measure the distance from point A (on the bottom of the frame) to point B (on the side of the frame). The hole on the bottom of the frame is slotted & may run from front to back or from side to side. See Chart 1 to determine the correct bracket. (See Image 1, right).
For 99 & NEWER CHEVY & GMC TRUCKS & SUV'S: If the tow hooks are bolted externally to the bottom of the frame, use the instructions above for the 87-98 Chevy & GMC trucks & SUV's. If the tow hooks are bolted internally in the frame rail, use Chart 2 to determine the correct bracket.
FOR ½ TON 2 WHEEL DRIVE ONLY: Check front suspension for torsion bar or coil spring. If you have torsion bar, use kit 199-1 XL or 199-3 MX. If you have a coil spring, use 199-8 XL or 199-9 MX.
FOR ¾ TON 2 WHEEL DRIVE: with torsion bar, use 3101-1.

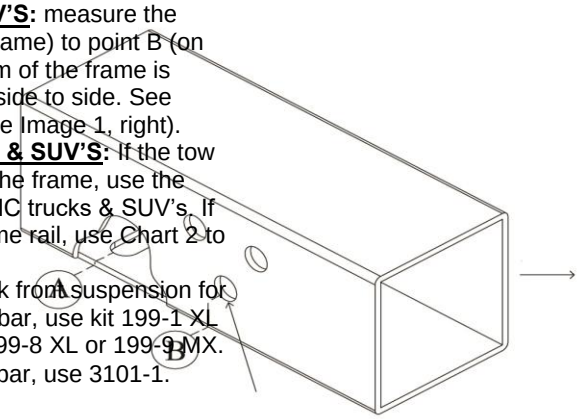

Passenger side view of frame

Lowerm

Chart 1 If Measurement is:	5,000 lb. Baseplate	5,000 lb. XL Baseplate	8,000 lb. MX
Approximately 1¼"	131-2*	131-17*	131-3*
Approximately 3"	n/a	131-15*	131-8*

* see Chart 3

Chart 2	5,000 lb. XL Baseplate	8,000 lb. MX Baseplate
½ ton 2WD	199-8*/199-1*	199-9*/199-3*
½ ton 4WD	199-1	199-3
¾ ton 4WD	N/A	3101-1*
¾ ton 2WD	199-8*	3101-1*

* see Chart 3

Chart 3	TYPE	COST	TIME	WEIGHT
131-2	S	W	C	22
131-3	MX	A	C	22
131-8	MX	A	C	30
131-15	XL	A	C	34
131-17	XL	A	C	34
199-1	XL	A	B	35
199-3	MX	A	B	35
199-8	XL	A	B	42
199-9	MX	A	B	40
3101-1	MX	A	B	25

37. This is a direct-connect baseplate, to which any motorhome-mounted Roadmaster tow bar will attach. It neither uses nor will it accommodate Roadmaster's crossbar. As a result, anchor brackets for Sterling cables will not fit and there are no mounting points for Stowmaster tow bars, Guardians or Tow Defender part 4700. Tow Defender part 4750 will fit. In most cases, Roadmaster makes a crossbar version of this baseplate that will accommodate these products. Refer back to the fit guide to identify a crossbar version.**39.** Bulb wiring kit (part 155) is needed.
39. Bulb wiring kit (part 155) is needed.
40. ON 2002 MODELS ONLY: need to check for subframe mounting bolts. These bolts are located under a splash panel behind the bumper. These bolts hold the engine cradle to the main frame. If these bolts are present, use a 194 series baseplate.
41. ON 2004 MODELS ONLY: baseplate will not fit short wheelbase of 113.3
42. Trimming of outside grille opening required for receiver to fit on 04 and 05 models only.
44. No right hand drive/steering.
46. Baseplate will not fit if vehicle is equipped with the Dynamic Laser Control.
47. On 2006 Acura MDX Models only: Must check towability with manufacturer.
48. This vehicle will not work with the Stowmaster All Terrain.
49. Special tools required – see instructions.
50. Please review the supplemental page located in the back of instructions if the vehicle is equipped with the auxiliary pump.
51. Will not work with optional Mopar skid plate.
53. Check towability with manufacturer.
56. This baseplate will fit if the Wrangler is equipped with grille guard 74256, skid plate 74570 and winch mount plate 74950 or 74955.