BASEPLATE KIT
INSTALLATION INSTRUCTIONS

KIT# 4402-1
09/17/04
RV

ROADMASTER, Inc. 6110 NE 127th Ave. Vancouver, WA 98682 1-800-669-9690 fax 360-735-9300 www.roadmasterinc.com

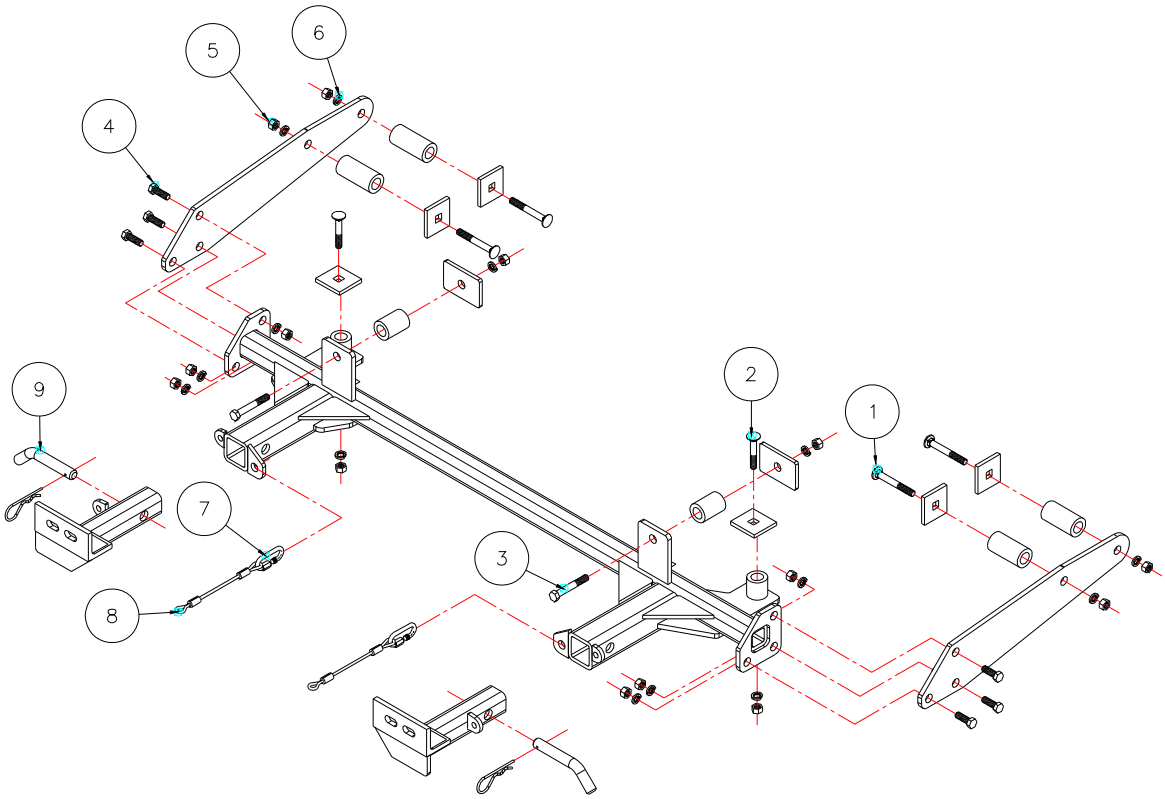

Item	Qty	Length	Width	Description
1	4	4"	1/2"	CARRIAGE BOLT
2	2	3"	1/2"	CARRIAGE BOLT
3	2	3 1/2"	1/2"	BOLT
4	6	1 1/2"	1/2"	BOLT
5	14		1/2"	NUT
6	14		1/2"	LOCK WASHER
7	2			CONNECTOR
8	2	8"		SAFETY CABLE
9	2		5/8"	DRAW PINS, SPRING PINS

ROADMASTER, INC.

BASEPLATE KIT INSTALLATION INSTRUCTIONS

KIT# 4402-1
09/17/04
RV

ROADMASTER, Inc. 6110 NE 127th Ave. Vancouver, WA 98682 1-800-669-9690 fax 360-735-9300 www.roadmasterinc.com

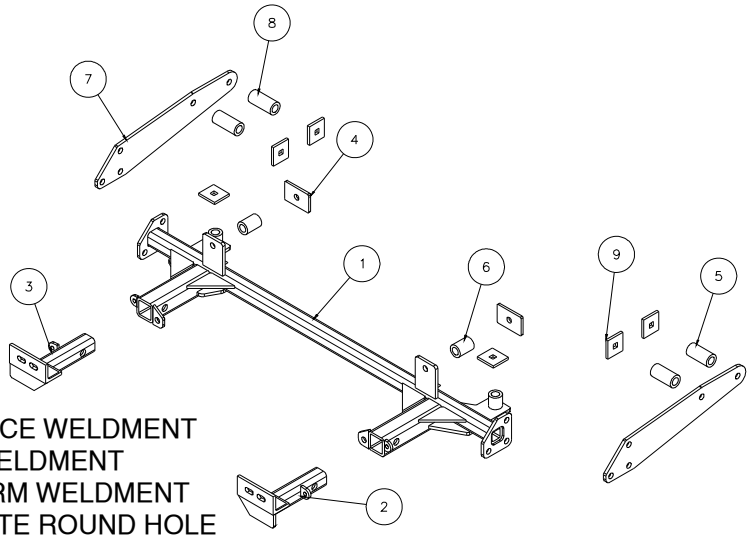

Item	Qty.	Part #	Description
1	1	C-001087	MAIN RECEIVER BRACE WELDMENT
2	1	C-001088	DRIVER SIDE ARM WELDMENT
3	1	C-001089	PASSENGER SIDE ARM WELDMENT
4	2	A-000147	2" x 3" BACKING PLATE ROUND HOLE
5	2	A-001183	1 1/4" O.D. x 2 1/2" ROUND TUBE
6	2	A-001461	1 1/4" O.D. x 1 3/4" ROUND TUBE
7	2	A-001492	SIDE MOUNTING PLATE
8	2	A-001494	1 1/4" O.D. x 2 3/4" ROUND TUBE

IMPORTANT: All baseplates ***must*** be assembled with all the bolts left loose for final adjustment and positioning (before tightening) unless otherwise instructed. All bolts ***must*** be torqued for proper strength. If more than one bolt is used per fastening point, the diagram may only show one. Use flat washers over all slotted holes and lock washers on all fasteners.

⚠ WARNING

Failure to heed these warnings or follow the installation instructions may result in a voided warranty, loss of towed vehicle, personal injury or death.

- **Do not weld or modify this baseplate or its components.** Welding or modification will void the warranty.
- **Do not use this document as a basis to design/fabricate a baseplate, as it may not show all parts or structural components.**
- We strongly recommend professional installation.
- If the towed vehicle has been in an accident, it must be properly repaired before attaching the baseplate. **Do not install the baseplate if any structural frame damage is found.**
- **The installer must use all bolts and parts supplied. If running changes were made** by the vehicle manufacturer after this kit was designed, some bolts or other fasteners may no longer be the correct size. **It is the installer's responsibility** to verify this kit is securely fastened to the vehicle.
- **Use Loctite® Red on all bolts used to secure this baseplate.** Torque all bolts to the specifications found at the end of these instructions. Do not over-torque the bolts or failure may occur.
- **The installer must inspect the baseplate to ensure adequate clearance, particularly around hoses, air conditioner lines, radiators, etc.** or non-warranty failure may result.
- Roadmaster manufactures many styles of baseplates. **If your baseplate has removable arms, they must be removed before driving the vehicle, unless the arms can be pinned or padlocked in place.** If not secured, the arms could vibrate out.
- Some motorhome chassis have such a tight turning radius that you can damage your motorhome, towed vehicle, tow bar or baseplate while turning sharply. **Before getting on the road, test your turning radius in an empty parking lot.** Turning too sharply could result in non-warranty damage to your towing system, motorhome and/or towed vehicle.
- **Do not back up with the towed vehicle attached** or non-warranty damage will occur to your towing system or vehicles.
- **The safety cables must connect the towing vehicle to the towed vehicle frame to frame, with the cables crossed, with enough slack for sharp turns.** See cable instructions for proper routing. Failure to do so will result in non-warranty damage and/or the loss of the towed vehicle.
- This kit is designed for use with ROADMASTER tow bars and ROADMASTER adapters only. **Using this kit with other brands, without an approved ROADMASTER adapter, may result in non-warranty damage or injury.**
- **Receiver extensions and out-of-level towing situations of 3 inches or more.** This can cause the system to swing much higher and lower, causing excessive strain on the tow bar, baseplate and frame. That can cause the towing system to fail, causing property damage, personal injury or even death. **If you must use a receiver extension or drop hitch to tow, it will reduce your receiver's weight capacity by 1/3 to avoid damaging your system. Never use more than one extension and/or drop hitch, as this will void your warranty.**
- **Every 3,000 miles, the owner must inspect all mounting points for cracks or fatigue, and check the fasteners** for proper torque, according to the bolt torque requirements chart on the last page of these instructions.
- **The owner must follow the vehicle manufacturer's instructions to prepare the vehicle for towing. Failure to do so may cause severe damage to the vehicle.**
- **This baseplate is only warranteed for the original installation.** Installing a used baseplate on another vehicle is not recommended and will void the warranty.

BASEPLATE KIT
INSTALLATION INSTRUCTIONS

KIT# 4402-1
09/17/04
RV

ROADMASTER, Inc. 6110 NE 127th Ave. Vancouver, WA 98682 1-800-669-9690 fax 360-735-9300 www.roadmasterinc.com

1. This is one of our XL series brackets, which allows the visible front portion of the brackets to be easily removed from the front of the vehicle (Fig.A). The bracket consists of one main brace, two side braces, two removable front bracket arms, and a hardware pack. Before starting the installation, lay out the kit components in order, starting with step 2. This will give you a visual idea of how the components work, and will also confirm that everything is present and accounted for.

Fig.A

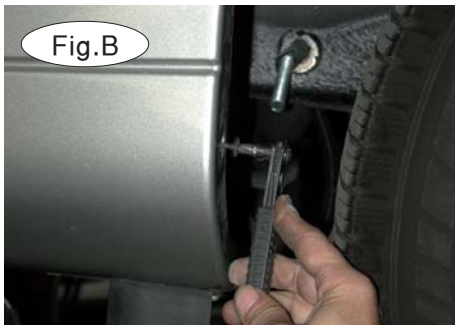
Fig.B

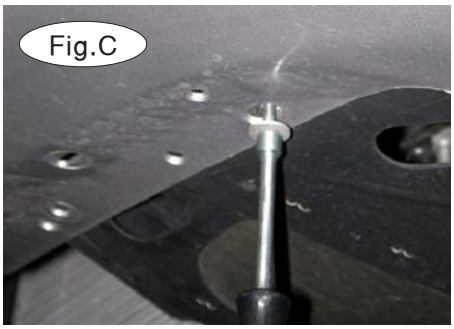
Fig.C

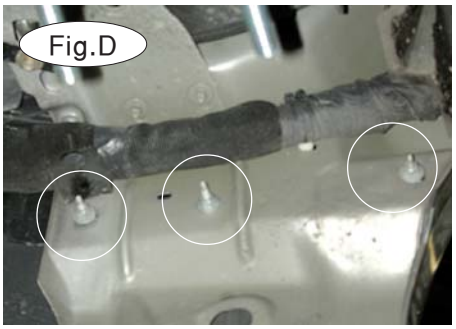
Fig.D

2. ***Important:*** **please use all supplied bolts and parts and read all instructions carefully before beginning this installation. The majority of questions you may have can be answered within the text, and proper installation will ensure safe and secure travel.** Now, begin the installation. Start by removing one Phillips head screw on the edge of the fender well, on each side (Fig.B).

3. Remove the six 8mm head bolts on the splash panels, on each side (Fig.C). Then, remove the splash panels.

4. Remove the three 10mm head nuts on the inside of the fender, on each side (Fig.D).

Fig.E

Fig.F

Fig.G

5. Pull out and away at each corner of the fascia (Fig.E). Then, remove the fascia (Fig.F).

6. Remove one 8mm bolt (Fig.G), one Phillips head screw (Fig.H), and one plastic fastener (Fig.I) from each of the air deflectors. Trim the air deflectors (Fig.J) or remove.

Fig.H

Fig.I

Fig.J

BASEPLATE KIT
INSTALLATION INSTRUCTIONS

KIT# 4402-1
09/17/04
RV

ROADMASTER, Inc. 6110 NE 127th Ave. Vancouver, WA 98682 1-800-669-9690 fax 360-735-9300 www.roadmasterinc.com

Fig.K

Fig.L

Fig.M

7. Remove the four 13mm nuts on each side of the bumper core (Fig.K). Then, remove the bumper core.

8. Fishwire the 2" x 1-7/8" backing plate and the 4" carriage bolt. Fishwire through the existing holes in the frame (Fig.L). (There are two on each side.)

9. Find the existing bottom hole in the frame close to the front opening on each side, and insert a ½" x 3" carriage bolt, 2" x 1-7/8" backing plate through the front of the frame and into the bottom hole on each side (Fig.M and Fig.N). Note that the hole may have a slug attached. If so, the slug should be broken off.

Fig.N

Fig.O

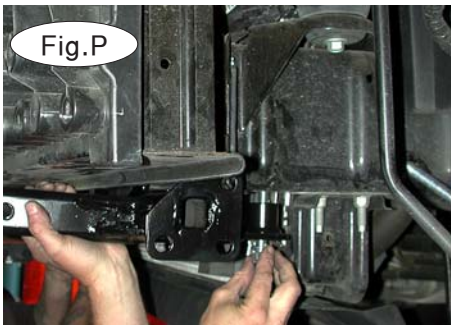
Fig.P

10. Now, reinstall the bumper core by reversing step 7. Trim the plastic bumper absorption plate by cutting eight inches in from the outside, and level with the bottom of the bumper core. (Refer to the white line in Fig.O).

11. Lift the bracket into place and bolt through the lower frame rail to hold it in place (Fig.P).

12. Bolt through the top receiver brace mounts and the radiator cross member with two ½" x 3½" bolts, using 1¾" spacers and 2" x 3" backing plates (Fig.Q). Finish with ½" lock washers and nuts.

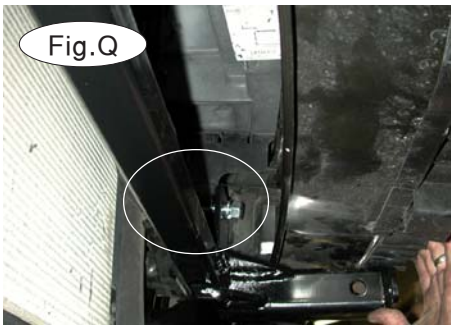
Fig.Q

Fig.R

13. Mount the side plates to the sides of the frame rails (Fig.R). Bolt two 2½" spacers, with lock washers and nuts, to the driver's side of the side plate and two 2¾" spacers, with lock washers and nuts, to the passenger side of the side plate. Then, bolt the side plate to the main brace, using three ½" x 1½" bolts, lock washers and nuts (each side).

All illustrations and specifications contained herein are based on the latest information available at the time of publication approval.
ROADMASTER, INC. reserves the right to make changes at any time without notice in material, specification and models or to discontinue models.

BASEPLATE KIT
INSTALLATION INSTRUCTIONS

KIT# 4402-1
09/17/04
RV

ROADMASTER, Inc. 6110 NE 127th Ave. Vancouver, WA 98682 1-800-669-9690 fax 360-735-9300 www.roadmasterinc.com

Fig.S

Fig.T

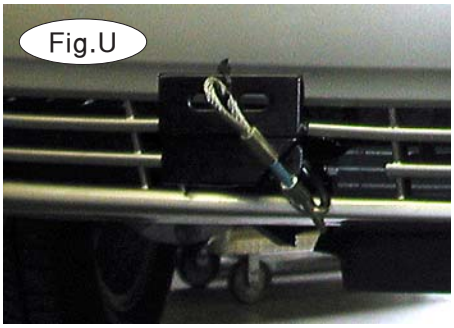
Fig.U

14. Tighten the bolts. Start with the lower bolt that passes through the frame rail (Fig.S). Then, tighten the bolts on the upper core support. This pulls the bracket up and into place. Then, tighten the remaining side plate bolts (five on each side).
15. Ensure that all bolts are torqued to the specifications below.
16. Trim the lower crossbar section out of the fascia, on each side. Refer to Fig.T.
17. Reinstall the fascia by reversing steps 2 through 5.
18. Fit the front bracket arms into the front receiver braces, and secure them in place with the supplied 5/8" draw pins and spring pins.
19. Attach the 8" safety cables with the cable connectors (Q-Links) to the front of the receiver braces (Fig.U).
20. Attach the ends of the safety cables to the tow vehicle's safety cables and tow bar.
21. Install the tow bar to the mounting bracket according to the manufacturer's instructions.

BOLT TORQUE REQUIREMENTS

Note: The torque values represented below are intended as general guidelines. Torque requirements for specific applications may vary. Roadmaster does not warrant this information to be accurate for all applications and disclaims all liability for any claims or damages which may result from its use.

STANDARD BOLTS

Thread Size	Grade	Torque
5/16	5	13 ft./lb.
3/8	5	23 ft./lb.
7/16	5	37 ft./lb.
1/2	5	56 ft./lb.
5/8	5	150 ft./lb.

METRIC BOLTS

Thread Size	Grade	Plated / Unplated	
8mm-1.0	8.8	20 ft./lb.	18 ft./lb.
8mm-1.25	8.8	19 ft./lb.	18 ft./lb.
10mm-1.25	8.8	38 ft./lb.	36 ft./lb.
10mm-1.5	8.8	37 ft./lb.	35 ft./lb.

METRIC BOLTS

Thread Size	Grade	Plated / Unplated	
12mm-1.25	8.8	70 ft./lb.	65 ft./lb.
12mm-1.5	8.8	66 ft./lb.	61 ft./lb.
12mm-1.75	8.8	65 ft./lb.	60 ft./lb.
14mm-2.0	8.8	104 ft./lb.	97 ft./lb.

All illustrations and specifications contained herein are based on the latest information available at the time of publication approval.
ROADMASTER, INC. reserves the right to make changes at any time without notice in material, specification and models or to discontinue models.