1-800-669-9690

R O A D M A S T E R

BASEPLATE KIT INSTALLATION INSTRUCTIONS

ROADMASTER, Inc. 6110 NE 127th Ave. Vancouver, WA 98682 1-800-669-9690 fax 360-735-9300 www.roadmasterinc.com

PARTS LIST:
1- FRONT BRACE (A) - Passenger side
1- FRONT BRACE (B) - Driver side
1- MAIN BRACE (C) - Passenger side
1- MAIN BRACE (D) - Driver side

KIT NO. 52335-1

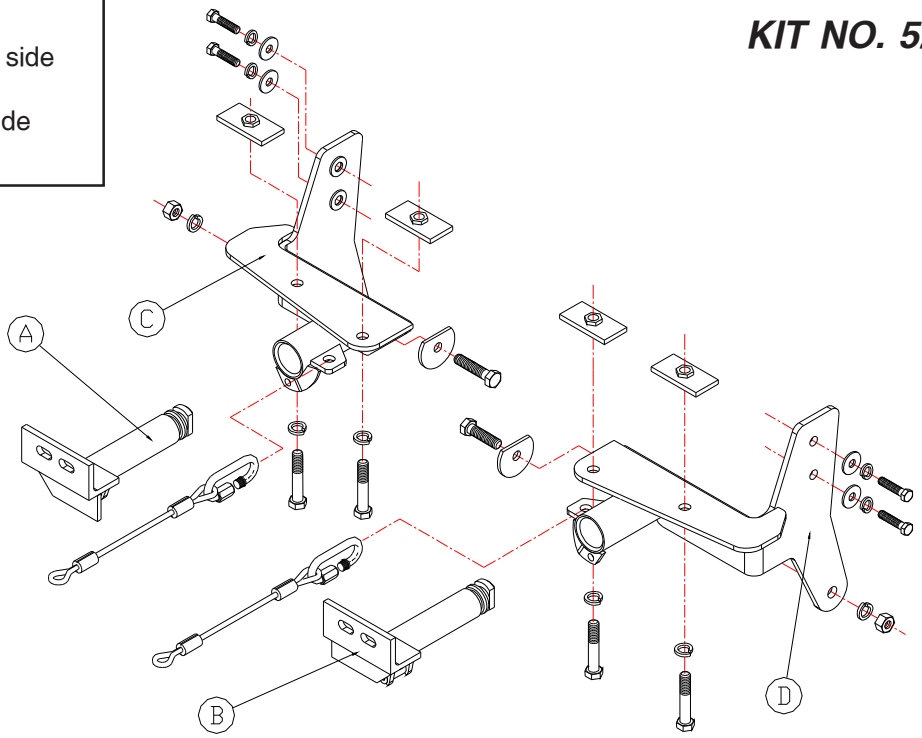

2/15/02

IMPORTANT: All baseplates ***must*** be assembled with all the bolts left loose for final adjustment and positioning (before tightening) unless otherwise instructed. All bolts ***must*** be torqued for proper strength. If more than one bolt is used per fastening point, the diagram may only show one.

• Use flat washers over all slotted holes ***• Use lock washers on all fasteners***

⚠ WARNING

Failure to follow the below warnings and the installation instructions may result in voiding your warranty, property damage, the loss of your towed vehicle, personal injury or even death.

- **Installation of most baseplates requires moderate mechanical aptitude and skills.** We strongly recommend professional installation by an experienced installer.
- **The installer must read the instructions and use all bolts and parts supplied.**
- **Use Loctite® Red** on all bolts used for mounting this baseplate.
- **Every 3,000 miles, the owner must inspect the fasteners** for proper torque, according to the bolt torque requirements chart on the last page of these instructions. **The owner must also inspect all mounting points for cracks or other signs of fatigue every 3,000 miles.**
- **The owner must check the vehicle manufacturer's instructions for the proper procedure(s) to prepare the vehicle for towing.** Some vehicles must be equipped with a transmission lube pump, an axle disconnect, driveline disconnect or free-wheeling hubs before they can be towed. **Failure to properly equip the vehicle will cause severe damage to the transmission.**
- **Do not weld.** This baseplate is designed to be bolted to the vehicle. Welding will void the warranty.
- **Do not use this document for custom fabrication,** as it may not show all parts or structural components could result in loss of the towed vehicle.
- If the towed vehicle has been in an accident, it must be properly repaired before attaching the baseplate. **Do not install the baseplate if any structural frame damage is found.**
- **If running changes were made** by the vehicle manufacturer after this kit was designed, some bolts or other fasteners in the hardware pack may no longer be the correct size. **It is the installer's responsibility** to verify this kit is securely fastened to the vehicle and fitted with the correct hardware to account for these changes.
- Roadmaster manufactures many styles of baseplates. **If your baseplate has removable arms, they must be removed before driving the vehicle, unless the arms can be pinned or padlocked in place.** If not secured, the arms could vibrate out.
- Some motorhome chassis have such a tight turning radius that you can damage your motorhome, towed vehicle, tow bar or baseplate while turning sharply. **Before getting on the road, test your turning radius in an empty parking lot.** Turning too sharply could result in non-warranty damage to towing system, motorhome and/or towed vehicle.
- **Do not back up with the towed vehicle attached** or non-warranty damage will occur to your towing system, motorhome and/or towed vehicle.
- **The safety cables must connect the towing vehicle to the towed vehicle frame to frame, with the cables crossed, with enough slack for sharp turns.** Refer to the cable instructions for proper routing. Failure to leave enough slack in the safety cables, or failure to connect the safety cables frame to frame, will result in the loss of the towed vehicle.
- This kit is designed for use with ROADMASTER tow bars and ROADMASTER adapters only. **Using this kit with other brands, without an approved ROADMASTER adapter, may result in non-warranty damage or injury.**
- Upon final installation, **the installer must inspect the baseplate to ensure adequate clearance, particularly around hoses, air conditioner lines, radiators, etc.**
- **This baseplate is only warranteed for the original installation.** Installing a used baseplate on another vehicle is not recommended and will void the warranty.

1-800-669-9690

R O A D M A S T E R

BASEPLATE KIT INSTALLATION INSTRUCTIONS

ROADMASTER, Inc. 6110 NE 127th Ave. Vancouver, WA 98682 1-800-669-9690 fax 360-735-9300 www.roadmasterinc.com

KIT NO. 52335-1

1. This bracket kit is one of our EZ Series, which is hidden for the most part behind the front bumper facia and grille. The kit consists of two receiver braces, two front braces and a hardware kit. The front braces install in the receiver braces and are locked in place with a cam and spring lock when rotated 90 degrees. Pull the locking pin forward and twist 90 degrees to remove and store the front braces. Start by laying the kit out and making sure all the components are present.
2. The bumper grille and bumper fascia will have to be removed to install the receiver braces. Start at the top of the grille by pulling four plastic fasteners. Locate two plastic clips molded in the bottom of the grille and depress the clips if necessary to pull the grille up and out.
3. Remove two remaining plastic fasteners near the top of the radiator and three more, which were covered by the grille.
4. Follow the junction of the bumper skin and front fenders to the front of the fender well and remove the screws with a 10mm head inside each fender well.
5. On the bottom of the bumper fascia, next to the fender wells, are black Phillips head screws. Remove them and save.
6. Next, remove two plastic fasteners from the bottom of the bumper fascia, then pull forward and off.
7. Working on one side at a time, remove two outside bolts holding the bumper core to the front of the vehicle.
8. Hold the receiver brace to the side of the vehicle and bolt through the top mounting holes with two 10mm x 1.25 x 35mm bolts, lock washers and fender washers. Align to the bottom of the bumper core then tighten in position.
9. Bolt through the bottom tie down hole with a ½"x 1½" bolt, ½" backing plate washer, lock washer and nut.
10. Now using the brace as a drill template, drill through the two front mounting holes into the bottom of the bumper core with a 17/32" drill bit. Drill through to the middle of the bumper core.
11. Bolt through the brace and the lower portion of the bumper core with two ½" x 2½" bolts, lock washers ¼" x 1½" x 3" threaded backing plates.
12. Repeat steps 7 through 11 for the remaining side.
13. Torque all bolts to the specifications below.
14. Hold the bumper fascia in position and mark the top horizontal grille rib on each for trimming, then trim to clear the receiver braces.
15. Now reinstall the fascia by reversing steps 1 through 7.
16. Insert the front braces into the receiver brace and twist 90 degrees to lock in place.
17. Mount the tow bar according to the manufacturer's instructions.
18. Attach the 10" safety cables to the receiver brace using the supplied cable connectors. Connect the other end to the tow vehicle's safety cables and the tow bar.

2/15/02

BOLT TORQUE REQUIREMENTS

Note: The torque values represented below are intended as general guidelines. Torque requirements for specific applications may vary. Roadmaster does not warrant this information to be accurate for all applications and disclaims all liability for any claims or damages which may result from its use.

STANDARD BOLTS

Thread Size	Grade	Torque
5/16	5	13 ft./lb.
3/8	5	23 ft./lb.
7/16	5	37 ft./lb.
1/2	5	56 ft./lb.
5/8	5	150 ft./lb.

METRIC BOLTS

Thread Size	Grade	Plated / Unplated	
8mm-1.0	8.8	20 ft./lb.	18 ft./lb.
8mm-1.25	8.8	19 ft./lb.	18 ft./lb.
10mm-1.25	8.8	38 ft./lb.	36 ft./lb.
10mm-1.5	8.8	37 ft./lb.	35 ft./lb.

METRIC BOLTS

Thread Size	Grade	Plated / Unplated	
12mm-1.25	8.8	70 ft./lb.	65 ft./lb.
12mm-1.5	8.8	66 ft./lb.	61 ft./lb.
12mm-1.75	8.8	65 ft./lb.	60 ft./lb.
14mm-2.0	8.8	104 ft./lb.	97 ft./lb.

All illustrations and specifications contained herein are based on the latest information available at the time of publication approval.
ROADMASTER, INC. reserves the right to make changes at any time without notice in material, specification and models or to discontinue models.

1-800-669-9690

R O A D M A S T E R

BASEPLATE KIT INSTALLATION INSTRUCTIONS

ROADMASTER, Inc. 6110 NE 127th Ave. Vancouver, WA 98682 1-800-669-9690 fax 360-735-9300 www.roadmasterinc.com

KIT NO. 52335-1

HARDWARE LIST:
4-10MM X 1.25 X 35MM BOLTS
4-10MM LOCK WASHERS
4-10MM FENDER WASHERS
2-1/2" X 1 ½" BOLTS
4-1/2" X 2 ½" BOLTS
2-1/2" CLIPPED PLATE WASHERS
6-1/2" LOCK WASHER
2-1/2" NUT
4-1/4" X 1 ½" X 3" THREADED BACKING PLATE
2-CABLE CONNECTORS
2-10" SAFETY CABLES

2/15/02

BOLT TORQUE REQUIREMENTS

Note: The torque values represented below are intended as general guidelines. Torque requirements for specific applications may vary. Roadmaster does not warrant this information to be accurate for all applications and disclaims all liability for any claims or damages which may result from its use.

STANDARD BOLTS

Thread Size	Grade	Torque
5/16	5	13 ft./lb.
3/8	5	23 ft./lb.
7/16	5	37 ft./lb.
1/2	5	56 ft./lb.
5/8	5	150 ft./lb.

METRIC BOLTS

Thread Size	Grade	Plated	Unplated
8mm-1.0	8.8	20 ft./lb.	18 ft./lb.
8mm-1.25	8.8	19 ft./lb.	18 ft./lb.
10mm-1.25	8.8	38 ft./lb.	36 ft./lb.
10mm-1.5	8.8	37 ft./lb.	35 ft./lb.

METRIC BOLTS

Thread Size	Grade	Plated	Unplated
12mm-1.25	8.8	70 ft./lb.	65 ft./lb.
12mm-1.5	8.8	66 ft./lb.	61 ft./lb.
12mm-1.75	8.8	65 ft./lb.	60 ft./lb.
14mm-2.0	8.8	104 ft./lb.	97 ft./lb.

All illustrations and specifications contained herein are based on the latest information available at the time of publication approval.
ROADMASTER, INC. reserves the right to make changes at any time without notice in material, specification and models or to discontinue models.