Installation Instructions

Thank you for purchasing our anti-sway bar kit. Please read through these instructions before installation.

Rear Anti-Sway Bar Kit for Workhorse W22, Holiday Rambler Vacationer and Monaco Lapalma

part #1259-109

1¾" diameter

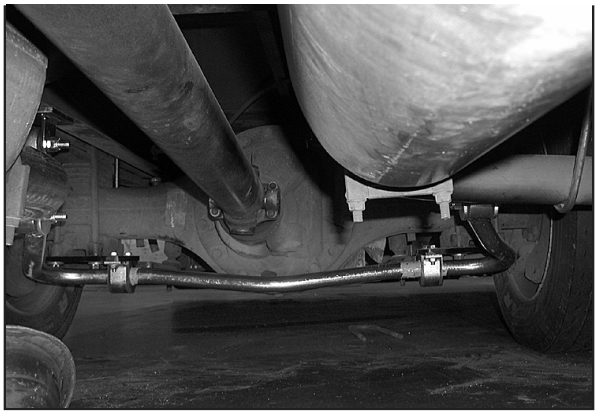

Note: If vehicle is equipped with Firestone Ride Rite air bags, see supplemental instructions 590054-00.

INTRODUCTION

Thank you for purchasing this anti-sway bar kit. This kit is designed to improve the handling characteristics of your motorhome by reducing the body roll and balancing the weight transfer during cornering. The anti-sway bar kit is engineered for long life and trouble-free performance. All the hardware needed for installation is included in this kit. Refer to the PARTS LIST in these instructions to identify the parts.

SUGGESTED TOOLS

The following tools are suggested to complete the installation procedures:

- General hand tools
- Sockets: 5/8", 11/16", 3/4", 15/16", 1-1/8", 1-1/16"
- Drill Motor
- Torque wrench
- Drill bits: 1/4", 1/2
- Wrenches: 5/8", 11/16", 3/4", 15/16"

⚠ WARNING

Failure to follow these instructions can result in property damage, personal injury or even death.

- If raising the vehicle to install the anti-sway bar, always support the vehicle with jack stands at both frame rails or at the rear axle before working underneath. Ensure that the jack stands are securely positioned, and are rated at or above the weight of the vehicle.
- The installer must read the instructions and use all bolts and parts supplied. Use only the parts supplied by ROADMASTER to install this kit.
- Minor modifications are sometimes necessary due to slight vehicle variations, even for the same year, make and model.
- Regardless of year, make and model, a wide range of options for specific applications may or may not interfere with the installation. It is the installer's responsibility to make certain that equipment is not damaged once the suspension solution travels through the full range of motion. Failure to ensure adequate clearance could result in non-warranty property damage, personal injury or even death.
- If running changes were made by the manufacturer after this kit was designed, there may be weldments, braces, gussets, or other structural items which interfere with the installation. It is the installer's responsibility to allow for these running changes without sacrificing the structural integrity of the anti-sway bar. Failure to securely fasten the anti-sway bar could result in property damage, personal injury or even death.
- ROADMASTER will not be responsible for any damage or injury resulting from any modification or alteration.
- Check ALL the fasteners for tightness before and after road testing the vehicle.
- Do not use this document for custom fabrication, as it may not show all parts or structural components.
- Do not use an air impact wrench when re-installing bolts, as stripped threads may result.
- This anti-sway bar is only warranteed for the original installation. Installing a used anti-sway bar on another vehicle is not recommended and will void the warranty.

PARTS LIST

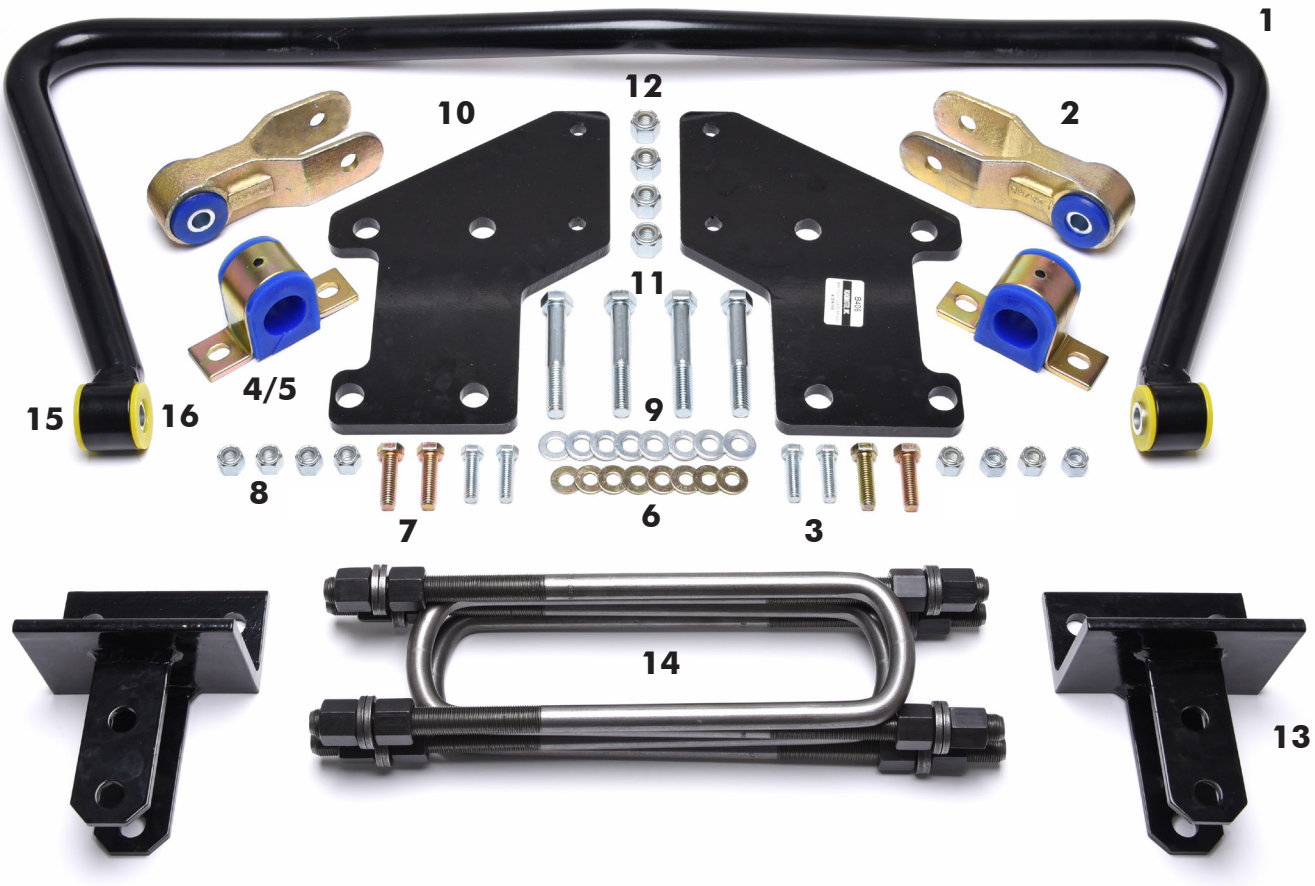

Part #1259-109

Part #	Description	Qty
1. 580332-00	Sway bar, 1-3/4"	1
2. B209	Shackle assembly	2
3. 350703-00	Bolt, 1/2" x 2"	4
4. B141	Bracket, u-clamp	2
5. 205220-10	Bushing, split poly	2
6. 350304-80	Washer, 3/8"	8
7. 350096-80	Bolt, 1/2" x 1-3/4"	4
8. 350259-00	Locknut, 1/2"	8
9. 350308-20	Washer, 1/2"	8

Part #	Description	Qty
10. B406	Bracket, flat	2
11. 350158-00	Bolt, 5/8"	4
12. 350263-00	Nut, 5/8"	4
13. B734	Frame bracket	2
14. 357427-50	U-bolt assembly	4
15. 205209-00	Poly Bushing	4
16. 205503-00	Sleeve	2
17. 400011-30*	AQUALUBE Grease	1

*not pictured

INSTALLATION

The following instructions must be followed in the order listed to ensure a proper installation and to preserve the ROADMASTER warranty.

1. Remove parts from box and match with parts list.

Make sure that the kit has all the parts shown on the parts list page.

2. Apply parking brake. Block front and rear wheels.

For Workhorse W22 applications, follow steps 3 through 8 below. For Holiday Rambler Vacationer and Monaco Lapalma applications, proceed now to step 9 in these installation instructions.

3. Substitute longer u-bolts and install mounting plates.

A: If your chassis is like Figure 1:

Remove the nuts from the u-bolts on the driver's side. Remove each u-bolt and replace with part 357427-00. Reinstall the factory axle plate and then the mounting plate with the small holes in the plate toward the front and center of the chassis. Torque to 175-200 ft.-lbs. Repeat this process on the passenger side.

B: If your chassis is like Figures 2 and 3:

Remove the nuts from the u-bolts on the driver's side. Remove each u-bolt and replace with part 357427-00. Reinstall the factory axle/shock plate and install washers and nuts. Torque to 175-200ft.-lbs. Now install the mounting plate with the small holes in the plate toward the front and center of the chassis. Torque to 175-200 ft.-lbs. Repeat this process on the passenger side.

C: If your chassis is like Figure 4:

Some W22 chassis have a separate shock mounting plate which mounts to the rear two U-bolts under the axle base plate. With this configuration, the bracket will mount under the axle plate and above the shock plate (Figure 4).

Figure 1

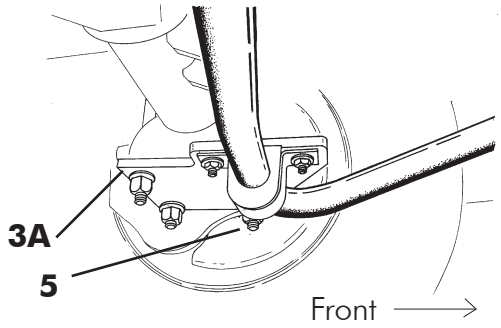

Figure 2

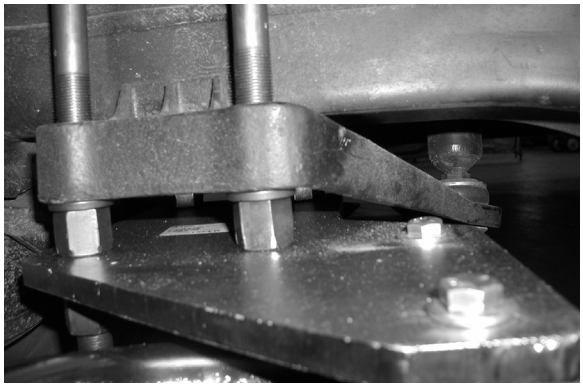

Figure 3

Figure 4

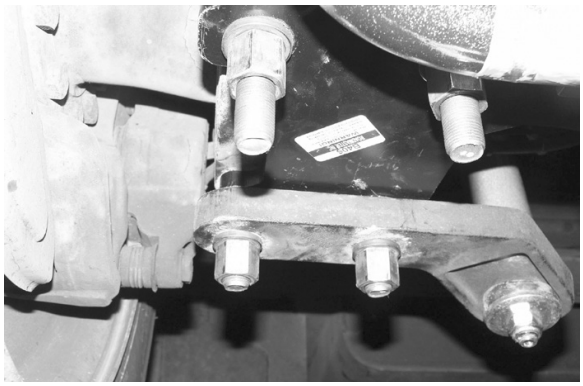

BOLT TORQUE REQUIREMENTS

STANDARD BOLTS

Thread	*Grade*	*Torque*
3/8	5	30 lb-ft
7/16	5	50 lb-ft
1/2	5	75 lb-ft
5/8	5	140 lb-ft

U-BOLTS

Thread	*Torque*
3/8-24	35 lb-ft
1/2-20	70 lb-ft
5/8-18	140 lb-ft
3/4-16	250 lb-ft
7/8-14	400 lb-ft

Note: *Endlink bolts use grommets and should NOT be torqued. Tighten these bolts by hand until the grommet starts to deform. Also, these torque values are intended as general guidelines. Roadmaster does not warrant this information to be accurate for all applications and disclaims all liability for any claims or damages which may result from its use.*

4. Install the saddle brackets and bushings on the anti-sway bar.

Lubricate the inside of the split bushings with the provided lubricant (Figure 5). Install bushings on the anti-sway bar near the arms. Slide the saddle brackets over the split bushings.

5. Install the anti-sway bar assembly to the flat plates.

Lift the anti-sway bar assembly into position so that the saddle bracket holes align with the flat plate holes. Use the provided bolts (350703-00), washers (350308-20) and nuts (350259-00) to attach. Tighten securely to 35-45 ft.-lbs. (Figure 3, 6).

6. Locate the shackles and the fasteners.

Attach shackle B209 to the anti-sway bar end with the provided bolts (350158-00) and nuts (350263-00). Do not tighten yet.

7. Locate the provided shackle hanger brackets.

Place the frame bracket against the frame rail. The location is correct when the shackle is straight up and down. Clamp the bracket in place and mark the mounting holes. Drill the pilot hole and then the final 1/2" hole in the frame.

Note: check the inside of the frame rail for lines, wires, etc. before drilling. Brackets can be switched side to side if necessary.

Note: There are two different sets of holes in the frame bracket hangar (Fig.7). Use the one that allows the anti-sway bar to ride as level as possible.

Fasten with the provided bolt (350096-80), washer (350308-20) and nut (350259-00) in both holes (Figure 8). Tighten fasteners to 55-65 ft.-lbs.

8. Tighten all nuts and bolts.

Tighten both upper and lower shackle bolts now to 30-45 ft.-lbs. Recheck all fasteners for proper torque.

Figure 5

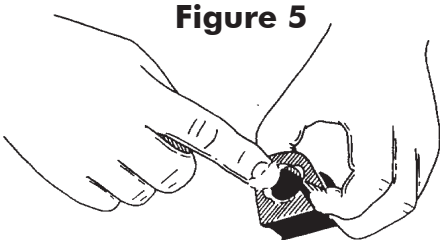

Figure 6

Figure 7

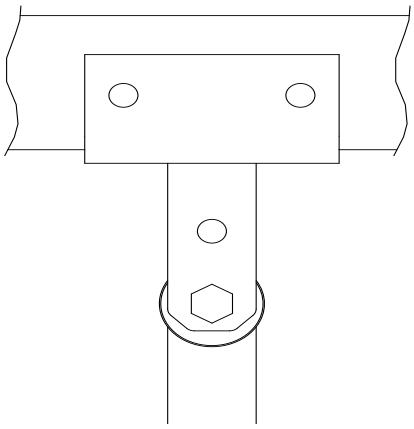

⚠WARNING

After road testing, re-check all fasteners for proper tightness — if a fastener has worked loose or fallen off, re-tighten or replace it. Without all kit components properly tightened or in place, the anti-sway bar will not stabilize the vehicle at full capacity, which may cause reduced cornering ability or other reductions in vehicle handling or performance.

Failure to follow these instructions may result in property damage, personal injury or even death.

Figure 8

For Holiday Rambler Vacationer and Monaco Lapalma applications only: follow steps 9 through 15 below.

9. Substitute longer u-bolts and install mounting plates.

Monaco la Palma models have a separate shock mounting plate which mounts to the rear two U-bolts under the axle base plate. With this configuration, the bracket will mount under the axle plate and above the shock plate and facing the rear of the coach (Figure 10).

10. Install the saddle brackets and bushings on the anti-sway bar.

Lubricate the inside of the split bushings with the provided lubricant. Install the bushings on the anti-sway bar near the arms. Slide the saddle brackets over the split bushings.

11. Install the anti-sway bar assembly to the flat plates.

Lift the anti-sway bar assembly into position so that the saddle bracket holes align with the flat plate holes. Use the provided bolts (350074-00), washers (350304-80) and nuts (350256-02) to attach (Figure 11). Tighten securely to 35-45 ft.-lbs.

12. Locate the shackles and fasteners.

Attach shackle B209 to the anti-sway bar end with the provided bolts (350158-00) and nuts (350263-00). Do not tighten yet.

13. Attach the frame brackets to the shackles.

Attach the two B239 brackets to the shackle using the provided hardware. Do not tighten yet (Figure 12).

14. Locate the provided shackle hanger brackets.

Place the frame bracket against the frame rail. The location is correct when the shackle is straight up and down. Clamp the bracket in place and mark the mounting holes. Drill the pilot hole and then the final 1/2" hole in the frame (Figure 7, 8).

Note: check the inside of the frame rail for lines, wires, etc. before drilling. Brackets can be switched side to side if necessary.

Fasten with the provided bolt (350096-80), washer (350308-20) and nut (350259-00) in both holes. Tighten fasteners 55-65 ft.-lbs.

15. Tighten all nuts and bolts.

Tighten both upper and lower shackle bolts now to 30-45 ft.-lbs. Recheck all fasteners for proper torque. Figure 13 shows the completed installation.

Figure 10

Figure 11

Figure 12
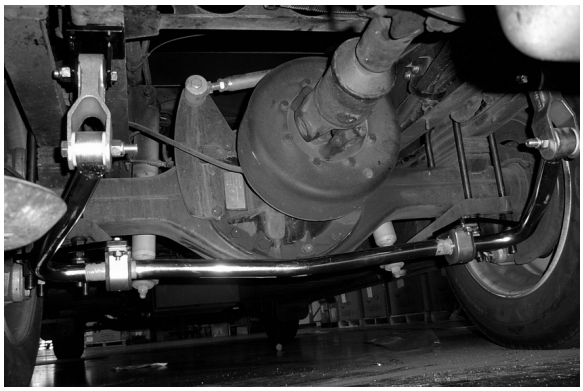
Figure 13